TC74

Tiny Serial Digital Thermal Sensor

Features

- Digital Temperature Sensing in SOT-23-5 Package
- Outputs Temperature as an 8-Bit Digital Word
- Simple Serial Port Interface
- Solid-State Temperature Sensing:
  - ±2°C Accuracy from +25°C to +85°C
  - ±3°C Accuracy from 0°C to +125°C
- 3.0 and 5.5V Operating Range
- Low Power:
  - 200µA Operating
  - 5µA Standby Mode

Applications

- Thermal Protection for Hard Disk Drives and other PC Peripherals
- PC Card Devices for Notebook Computers
- Low Cost Thermostat Controls
- Power Supplies
- Thermistor Replacement

Package Type

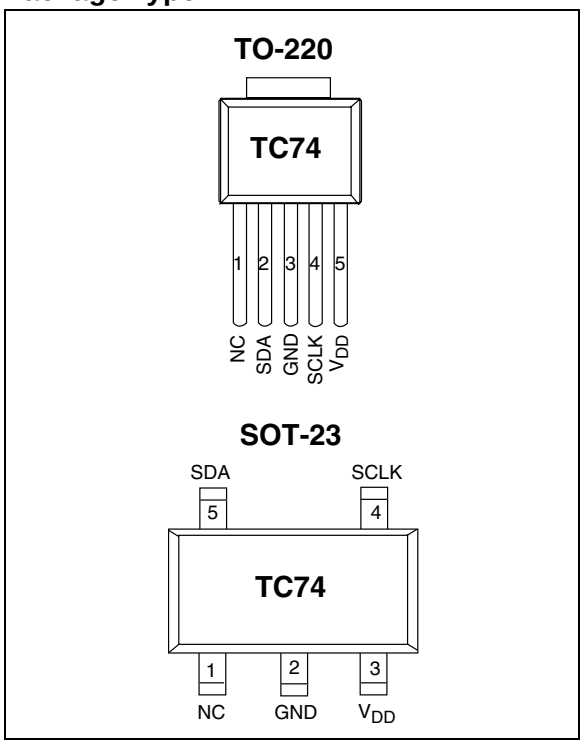

General Description

The TC74 is a serially accessible digital temperature sensor particularly suited for low cost and small form-factor applications. Temperature data is converted from the onboard thermal sensing element and made available as an 8-bit digital word.

Communication with the TC74 is accomplished via a 2-wire SMBus/I^2C™ compatible serial port. This bus also can be used to implement multi-drop/multi-zone monitoring. The SHDN bit in the CONFIG register can be used to activate the low power Standby mode.

Temperature resolution is 1°C. Conversion rate is a nominal 8 samples/sec. Power consumption is only 200µA typ, (5µA Standby, typ).

Small size, low installed cost, and ease of use make the TC74 an ideal choice for implementing thermal management in a variety of systems.

Functional Block Diagram

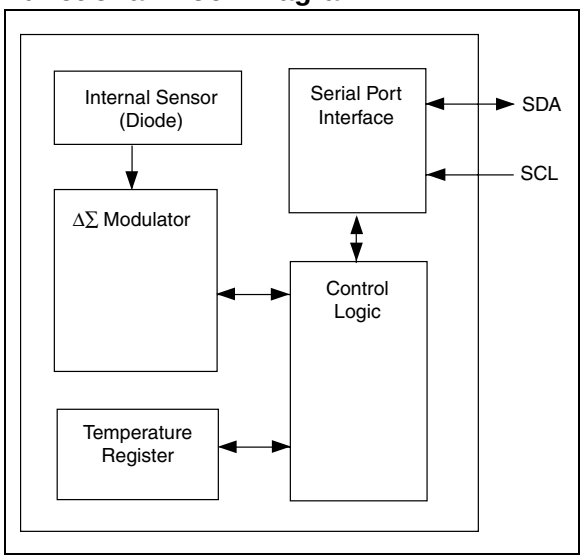

© 2002 Microchip Technology Inc.

Device Selection Table

Part Number	Package	Address	Temperature Range
TC74A0-3.3VCT	SOT-23A-5	1001 000	-40°C to +125°C
TC74A1-3.3VCT	SOT-23A-5	1001 001	-40°C to +125°C
TC74A2-3.3VCT	SOT-23A-5	1001 010	-40°C to +125°C
TC74A3-3.3VCT	SOT-23A-5	1001 011	-40°C to +125°C
TC74A4-3.3VCT	SOT-23A-5	1001 100	-40°C to +125°C
TC74A5-3.3VCT*	SOT-23A-5	1001 101*	-40°C to +125°c
TC74A6-3.3VCT	SOT-23A-5	1001 110	-40°C to +125°C
TC74A7-3.3VCT	SOT-23A-5	1001 111	-40°C to +125°C
TC74A0-5.0VCT	SOT-23A-5	1001 000	-40°C to +125°C
TC74A1-5.0VCT	SOT-23A-5	1001 001	-40°C to +125°C
TC74A2-5.0VCT	SOT-23A-5	1001 010	-40°C to +125°C
TC74A3-5.0VCT	SOT-23A-5	1001 011	-40°C to +125°C
TC74A4-5.0VCT	SOT-23A-5	1001 100	-40°C to +125°C
TC74A5-5.0VCT*	SOT-23A-5	1001 101	-40°C to +125°C
TC74A6-5.0VCT	SOT-23A-5	1001 110	-40°C to +125°C
TC74A7-5.0VCT	SOT-23A-5	1001 111	-40°C to +125°C
TC74A0-3.3VAT	TO-220-5	1001 000	-40°C to +125°C
TC74A1-3.3VAT	TO-220-5	1001 001	-40°C to +125°C
TC74A2-3.3VAT	TO-220-5	1001 010	-40°C to +125°C
TC74A3-3.3VAT	TO-220-5	1001 011	-40°C to +125°C
TC74A4-3.3VAT	TO-220-5	1001 100	-40°C to +125°C
TC74A5-3.3VAT	TO-220-5	1001 101	-40°C to +125°C
TC74A6-3.3VAT	TO-220-5	1001 110	-40°C to +125°C
TC74A7-3.3VAT	TO-220-5	1001 111	-40°C to +125°C
TC74A0-5.0VAT	TO-220-5	1001 000	-40°C to +125°C
TC74A1-5.0VAT	TO-220-5	1001 001	-40°C to +125°C
TC74A2-5.0VAT	TO-220-5	1001 010	-40°C to +125°C
TC74A3-5.0VAT	TO-220-5	1001 011	-40°C to +125°C
TC74A4-5.0VAT	TO-220-5	1001 100	-40°C to +125°C
TC74A5-5.0VAT	TO-220-5	1001 101	-40°C to +125°C
TC74A6-5.0VAT	TO-220-5	1001 110	-40°C to +125°C
TC74A7-5.0VAT	TO-220-5	1001 111	-40°C to +125°C

NOTE: *Default Address.

© 2002 Microchip Technology Inc.

1.0 ELECTRICAL CHARACTERISTICS

Absolute Maximum Ratings*

Supply Voltage (V_{DD}) ..... +6V
Voltage On Any Pin..... (GND – 0.3V) to (V_{DD} + 0.3V)
Current On Any Pin..... ±50 mA
Operating Temperature (T_A)..... See Below
Storage Temperature (T_{STG})..... -65°C to +150°C

*Stresses above those listed under "Absolute Maximum Ratings" may cause permanent damage to the device. These are stress ratings only and functional operation of the device at these or any other conditions above those indicated in the operation sections of the specifications is not implied. Exposure to Absolute Maximum Rating conditions for extended periods may affect device reliability.

TC74 ELECTRICAL SPECIFICATIONS

Electrical Characteristics: V_{DD} = 3.3V or 5.0V **(Note 5)**, -40°C ≤ T_A ≤ 125°C, unless otherwise noted.						
Symbol	**Parameter**	**Min**	**Typ.**	**Max**	**Unit**	**Test Conditions**
Power Supply						
V_{POR}	Power-on Reset Threshold	1.2	—	2.2	V	V_{DD} Falling Edge or Rising Edge
I_{DD}	Operating Current	—	200	350	µA	V_{DD} = 5.5V Serial Port Inactive **(Note 1)**
$I_{DD\text{-}STANDBY}$	Standby Supply Current	—	5	10	µA	V_{DD} = 3.3V Serial Port Inactive **(Note 1)**
Temperature to Bits Converter						
T_{ERR}	Temperature Accuracy TC74A	-2 -3 —	—	+2 — +2	°C	+25°C <T_A < +85°C 0°C < T_A < +125°C -40°C < T_A < 0°C
CR	Conversion Rate	4	8	—	Sps	**(Note 2)**
Serial Port Interface						
V_{IH}	Logic Input High	0.8 x V_{DD}	—	—	V	
V_{IL}	Logic Input Low	—	—	0.2 x V_{DD}	V	
V_{OL}	SDA Output Low	— —	— —	0.4 0.6	V V	I_{OL} = 3 mA I_{OL} = 6 mA **(Note 3)**
C_{IN}	Input Capacitance SDA, SCL	—	5	—	pF	
I_{LEAK}	I/O Leakage	-1	0.1	1	µA	

Note 1: Operating current is an average value integrated over multiple conversion cycles. Transient current may exceed this specification.

2: Maximum ensured conversion time after Power-on Reset (POR to DATA_RDY) is 250 msec.

3: Output current should be minimized for best temperature accuracy. Power dissipation within the TC74 will cause self-heating and temperature drift error.

4: SDA and SCLK must be connected to V_{DD} or GND.

5: V_{DD} = 3.3V for TC74X -3.3VCT. V_{DD} = 5.0V for TC74X -5.0VCT. All part types of the TC74 will operate properly over the wider power supply range of 2.7V to 5.5V. Each part type is tested and specified for rated accuracy at its nominal supply voltage. As V_{DD} varies from the nominal value, accuracy will degrade 1°C/V of V_{DD} change.

© 2002 Microchip Technology Inc.

TC74 ELECTRICAL SPECIFICATIONS (CONTINUED)

Electrical Characteristics: V_{DD} = 3.3V or 5.0V **(Note 5)**, -40°C ≤ T_A ≤ 125°C, C_L = 80pF unless otherwise noted.						
Serial Port AC Timing						
Symbol	**Parameter**	**Min**	**Typ.**	**Max**	**Unit**	**Test Conditions**
f_{SMB}	SMBus Clock Frequency	10	—	100	kHz	
t_{LOW}	Low Clock Period	4.7	—	—	µsec	10% to 10%
t_{HIGH}	High Clock Period	4	—	—	µsec	90% to 90%
t_R t_F	SMBus Rise Time SMBus Fall Time	— —	— —	1000 300	nsec nsec	10% to 90% 90% to10%
$t_{SU(START)}$	START Condition Setup Time (for repeated START Condition)	4	—	—	µsec	90% SCLK to 10% SDA
$t_{H(START)}$	START Condition Hold Time	4	—	—	µsec	
$t_{SU-DATA}$	Data In Setup Time	1000	—	—	nsec	
t_{H-DATA}	Data In Hold Time	1250	—	—	nsec	
$t_{SU(STOP)}$	STOP Condition Setup Time	4	—	—	µsec	
t_{IDLE}	Bus Free Time Prior to New Transition	4.7	—	—	µsec	
t_{POR}	Power-on Reset Delay	—	500	—	µsec	$V_{DD} \geq V_{POR}$ (Rising Edge)

Note 1: Operating current is an average value integrated over multiple conversion cycles. Transient current may exceed this specification.

2: Maximum ensured conversion time after Power-on Reset (POR to DATA_RDY) is 250 msec.

3: Output current should be minimized for best temperature accuracy. Power dissipation within the TC74 will cause self-heating and temperature drift error.

4: SDA and SCLK must be connected to V_{DD} or GND.

5: V_{DD} = 3.3V for TC74X -3.3VCT. V_{DD} = 5.0V for TC74X -5.0VCT. All part types of the TC74 will operate properly over the wider power supply range of 2.7V to 5.5V. Each part type is tested and specified for rated accuracy at its nominal supply voltage. As V_{DD} varies from the nominal value, accuracy will degrade 1°C/V of V_{DD} change.

© 2002 Microchip Technology Inc.

2.0 PIN DESCRIPTIONS

The descriptions of the pins are listed in Table 2-1.

TABLE 2-1: PIN FUNCTION TABLE

Pin Number (5-Pin SOT-23)	Pin Number (5-Pin TO-220)	Symbol	Type	Description
1	1	NC	None	No Internal Connection.
2	3	GND	Power	System Ground
3	5	V_{DD}	Power	Power Supply Input
4	4	SCLK	Input	SMBus Serial Clock
5	2	SDA	Bi-directional	SMBus Serial Data

Timing Diagrams

SMBUS READ Timing Diagram

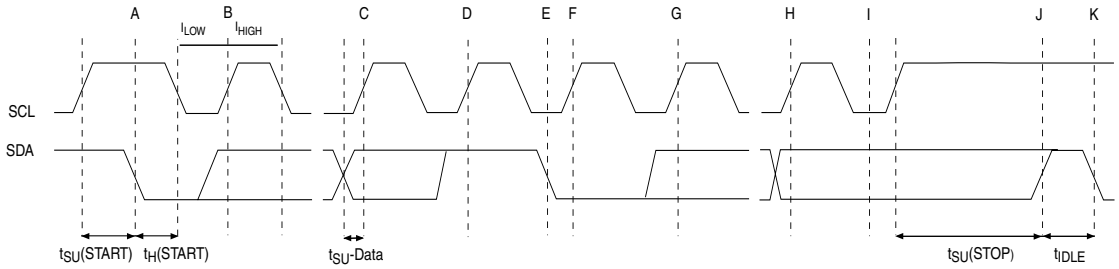

A = START Condition
B = MSB of Address Clocked into Slave
C = LSB of Address Clocked into Slave
D = R/$\overline{W}$ Bit Clocked into Slave
E = Slave Pulls SDA Line Low
F = Acknowledge Bit Clocked into Master
G = MSB of Data Clocked into Master
H = LSB of Data Clocked into Master
I = Acknowledge Clock Pulse
J = STOP Condition
K = New START Condition

SMBUS Write Timing Diagram

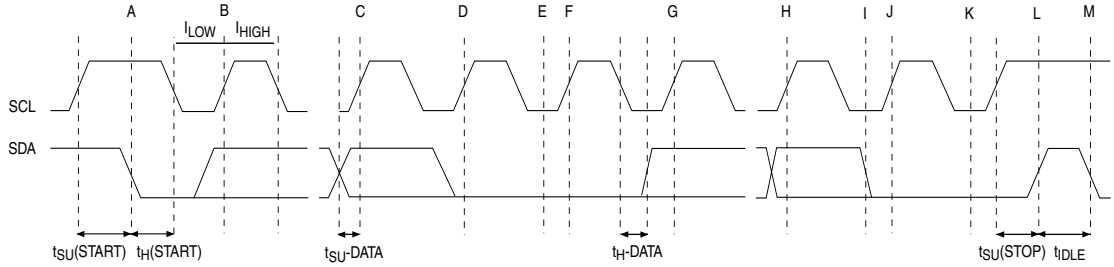

A = START Condition
B = MSB of Address Clocked into Slave
C = LSB of Address Clocked into Slave
D = R/W Bit Clocked into Slave
E = Slave Pulls SDA Line Low
F = Acknowledge Bit Clocked into Master
G = MSB of Data Clocked into Slave
H = LSB of Data Clocked into Slave
I = Slave Pulls SDA Line Low
J = Acknowledge Clocked into Master
K = Acknowledge Clock Pulse
L = STOP Condition, Data Executed by Slave
M = New START Condition

© 2002 Microchip Technology Inc.

3.0 DETAILED DESCRIPTION

3.1 Functional Description

The TC74 acquires and converts temperature information from its onboard solid-state sensor with a resolution of ±1°C. It stores the data in an internal register which is read through the serial port. The system interface is a slave SMBus. The temperature data can be read at any time through the SMBus port. Eight SMBus addresses are programmable for the TC74, which allows for a multi-sensor configuration. Also, there is low power Standby mode when temperature acquisition is suspended.

3.1.1 STANDBY MODE

The TC74 allows the host to put it into a low power (I_{DD} = 5µA, typical) Standby mode. In this mode, the A/D converter is halted and the temperature data registers are frozen. The SMBus port operates normally. Standby mode is enabled by setting the SHDN bit in the CONFIG register. Table 3-1 summarizes this operation.

TABLE 3-1: STANDBY MODE OPERATION

SHDN Bit	Operating Mode
0	Normal
1	Standby

3.1.2 SMBUS SLAVE ADDRESS

The TC74 is internally programmed to have a default SMBus address value of 1001 101b. Seven other addresses are available by custom order (contact factory).

3.2 Serial Port Operation

The Serial Clock input (SCL) and bi-directional data port (SDA) form a 2-wire bi-directional serial port for programming and interrogating the TC74. The following conventions are used in this bus architecture:

TABLE 3-2: SERIAL BUS CONVENTIONS

Term	Explanation
Transmitter	The device sending data to the bus.
Receiver	The device receiving data from the bus.
Master	The device which controls the bus: initiating transfers (START), generating the clock, and terminating transfers. (STOP)
Slave	The device addressed by the master.
START	A unique condition signaling the beginning of a transfer indicated by SDA falling (High-Low) while SCL is high.
STOP	A unique condition signaling the end of a transfer indicated by SDA rising (Low-High) while SCL is High.
ACK	A Receiver acknowledges the receipt of each byte with this unique condition. The Receiver drives SDA low during SCL high of the ACK clock-pulse. The Master provides the clock pulse for the ACK cycle.
Busy	Communication is not possible because the bus is in use.
NOT Busy	When the bus is idle, both SDA and SCL will remain high.
Data Valid	The state of SDA must remain stable during the High period of SCL in order for a data bit to be considered valid. SDA only changes state while SCL is low during normal data transfers. (See START and STOP conditions.)

All transfers take place under control of a host, usually a CPU or microcontroller, acting as the Master, which provides the clock signal for all transfers. The TC74 *always* operates as a Slave. The serial protocol is illustrated in Figure 3-1 All data transfers have two phases; all bytes are transferred MSB first. Accesses are initiated by a START condition, followed by a device address byte and one or more data bytes. The device address byte includes a Read/Write selection bit. Each access must be terminated by a STOP Condition. A convention called *Acknowledge* (ACK) confirms receipt of each byte. Note that SDA can change only during periods when SCL is LOW (SDA changes while SCL is HIGH are reserved for START and STOP Conditions).

FIGURE 3-1: SMBUS PROTOCOLS

Write Byte Format

S	Address	WR	ACK	Command	ACK	Data	ACK	P
	7 Bits			8 Bits		8 Bits		

Slave Address

Command Byte: selects which register you are writing to.

Data Byte: data goes into the register set by the command byte.

Read Byte Format

S	Address	WR	ACK	Command	ACK	S	Address	RD	ACK	Data	NACK	P
	7 Bits			8 Bits			7 Bits			8 Bits		

Slave Address

Command Byte: selects which register you are reading from.

Slave Address: repeated due to change in data-flow direction.

Data Byte: reads from the register set by the command byte.

Receive Byte Format

S	Address	RD	ACK	Data	Nack	P
	7 Bits			8 Bits		

S = START Condition
P = STOP Condition
Shaded = Slave Transmission

Data Byte: reads data from the register commanded by the last Read Byte or Write Byte transmission.

3.3 START Condition (S)

The TC74 continuously monitors the SDA and SCL lines for a START condition (a HIGH to LOW transition of SDA while SCL is HIGH) and will not respond until this condition is met.

3.4 Address Byte

Immediately following the START Condition, the host must transmit the address byte to the TC74. The states of A1 and A0 determine the 7-bit SMBus address for the TC74. The 7-bit address transmitted in the serial bit stream must match for the TC74 to respond with an Acknowledge (indicating the TC74 is on the bus and ready to accept data). The 8-bit in the Address Byte is a Read/Write Bit. This bit is a ‘1’ for a read operation or ‘0’ for a write operation. During the first phase of any transfer this bit will be set = 0 to indicate that the command byte is being written.

3.5 Acknowledge (ACK)

Acknowledge (ACK) provides a positive handshake between the host and the TC74. The host releases SDA after transmitting 8 bits. The host then generates a ninth clock cycle to allow the TC74 to pull the SDA line LOW. This action acknowledges that the TC74 successfully received the previous eight bits of data or address.

3.6 Data Byte

After a successful ACK of the address byte, the host must transmit the data byte to be written or clock in the data to be read. (See the appropriate timing diagrams). ACK will be generated after a successful write of a data byte into the TC74.

3.7 STOP Condition (P)

Communications must be terminated by a STOP condition (a LOW to HIGH transition of SDA while SCL is HIGH). The STOP Condition must be communicated by the transmitter to the TC74. NOTE: Refer to Timing Diagrams for serial bus timing.

© 2002 Microchip Technology Inc.

4.0 REGISTER SET AND PROGRAMMER'S MODEL

TABLE 4-1: COMMAND BYTE DESCRIPTION (SMBUS READ_BYTE AND WRITE_BYTE)

COMMAND	CODE	FUNCTION
RTR	00h	Read Temperature (TEMP)
RWCR	01h	Read/Write Configuration (CONFIG)

TABLE 4-2: CONFIGURATION REGISTER (CONFIG); 8 BITS, READ/ WRITE)

BIT	POR	FUNCTION	TYPE	OPERATION
D[7]	0	STANDBY Switch	Read/ Write	1 = standby, 0 = normal
D[6]	0	Data Ready*	Read Only	1 = ready 0 = not ready
D[5]-D[0]	0	Reserved - Always returns zero when read	N/A	N/A

***Note:** DATA_RDY bit RESET at power-up and SHDN enable.

FIGURE 4-1: DATA_RDY, SHDN OPERATION LOGIC DIAGRAM

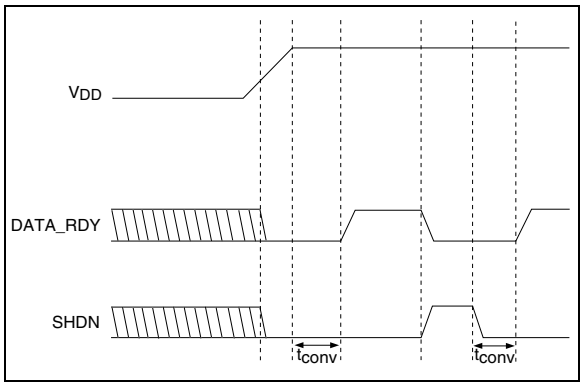

4.1 Temperature Register (TEMP), 8 Bits, READ ONLY

The binary value (2's complement format) in this register represents temperature of the onboard sensor following a conversion cycle. The registers are automatically updated in an alternating manner.

TABLE 4-3: TEMPERATURE REGISTER (TEMP)

D[7]	D[6]	D[5]	D[4]	D[3]	D[2]	D[1]	D[0]
MSB	X	X	X	X	X	X	LSB

In the temperature data registers, each unit value represents one degree (Celsius). The value is in 2's complement binary format such that a reading of 0000 0000b corresponds to 0°C. Examples of this temperature to binary value relationship are shown in Table 4-4.

TABLE 4-4: TEMPERATURE TO DIGITAL VALUE CONVERSION (TEMP)

ACTUAL TEMP.	REGISTERED TEMP.	BINARY HEX
+130.00°C	+127°C	0111 1111
+127.00°C	+127°C	0111 1111
+126.50°C	+127°C	0111 1111
+25.25°C	+25°C	0001 1001
+0.50°C	+1°C	0000 0001
+0.25°C	0°C	0000 0000
0.00°C	0°C	0000 0000
-0.25°C	0°C	0000 0000
-0.50°C	0°C	0000 0000
-0.75°C	-1°C	1111 1111
-1.00°C	-1°C	1111 1111
-25.00°C	-25°C	1110 0111
-25.25°C	-25°C	1110 0110
-54.75°C	-55°C	1100 1001
-55.00°C	-55°C	1100 1001
-65.00°C	-65°C	1011 1111

4.2 Register Set Summary

The TC74 register set is summarized in Table 4-5. All registers are 8 bits wide.

TABLE 4-5: TC74 REGISTER SET SUMMARY

NAME	DESCRIPTION	POR State	READ	WRITE
TEMP	Internal Sensor Temp. (2's Complement)	0000 0000b*	✓	
CONFIG	CONFIG Register	0000 0000b	✓	✓

***Note:** The TEMP resigister will be immediately updated by the A/D converter after the DATA_RDY Bit goes High.

5.0 PACKAGING INFORMATION

5.1 Package Marking Information

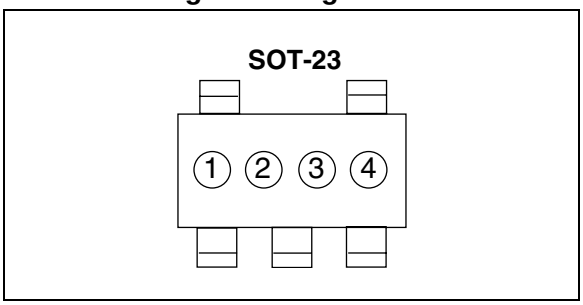

1 & 2 = part number code + temperature range and voltage

3 = year and quarter code

4 = lot ID number

TABLE 5-1: PACKAGE MARKING CODES

TC74 (V)	Code
TC74A0-3.3VCT	V0
TC74A1-3.3VCT	V1
TC74A2-3.3VCT	V2
TC74A3-3.3VCT	V3
TC74A4-3.3VCT	V4
TC74A5-3.3VCT	V5
TC74A6-3.3VCT	V6
TC74A7-3.3VCT	V7
TC74A0-5.0VCT	U0
TC74A1-5.0VCT	U1
TC74A2-5.0VCT	U2
TC74A3-5.0VCT	U3
TC74A4-5.0VCT	U4
TC74A5-5.0VCT	U5
TC74A6-5.0VCT	U6
TC74A7-5.0VCT	U7

© 2002 Microchip Technology Inc.

5.2 Taping Forms

Component Taping Orientation for 5-Pin SOT-23A (EIAJ SC-74A) Devices

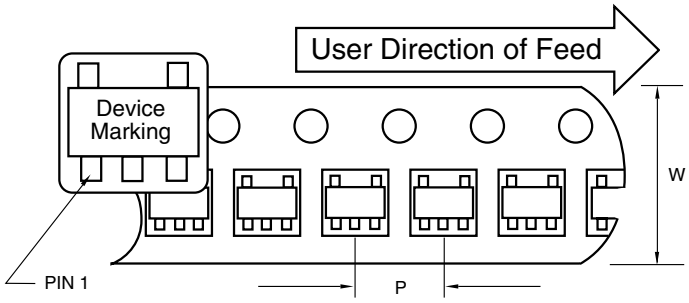

Standard Reel Component Orientation
TR Suffix Device
(Mark Right Side Up)

Carrier Tape, Number of Components Per Reel and Reel Size

Package	Carrier Width (W)	Pitch (P)	Part Per Full Reel	Reel Size
5-Pin SOT-23A	8 mm	4 mm	3000	7 in

5.3 Package Dimensions

SOT-23A-5

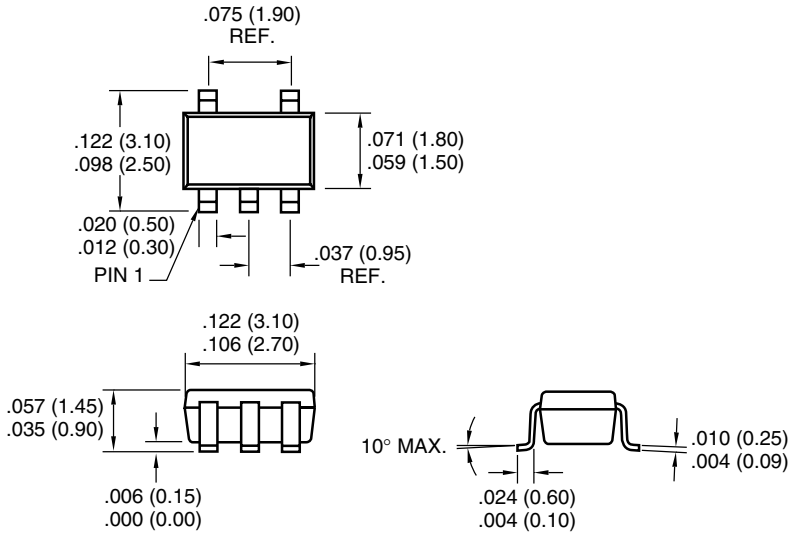

Dimensions: inches (mm)

NOTES:

© 2002 Microchip Technology Inc.

SALES AND SUPPORT

Data Sheets
Products supported by a preliminary Data Sheet may have an errata sheet describing minor operational differences and recommended workarounds. To determine if an errata sheet exists for a particular device, please contact one of the following:

1. Your local Microchip sales office
2. The Microchip Corporate Literature Center U.S. FAX: (480) 792-7277
3. The Microchip Worldwide Site (www.microchip.com)

Please specify which device, revision of silicon and Data Sheet (include Literature #) you are using.

New Customer Notification System
Register on our web site (www.microchip.com/cn) to receive the most current information on our products.

NOTES:

© 2002 Microchip Technology Inc.

Information contained in this publication regarding device applications and the like is intended through suggestion only and may be superseded by updates. It is your responsibility to ensure that your application meets with your specifications. No representation or warranty is given and no liability is assumed by Microchip Technology Incorporated with respect to the accuracy or use of such information, or infringement of patents or other intellectual property rights arising from such use or otherwise. Use of Microchip's products as critical components in life support systems is not authorized except with express written approval by Microchip. No licenses are conveyed, implicitly or otherwise, under any intellectual property rights.

Trademarks

The Microchip name and logo, the Microchip logo, FilterLab, KEELOQ, microID, MPLAB, PIC, PICmicro, PICMASTER, PICSTART, PRO MATE, SEEVAL and The Embedded Control Solutions Company are registered trademarks of Microchip Technology Incorporated in the U.S.A. and other countries.

dsPIC, ECONOMONITOR, FanSense, FlexROM, fuzzyLAB, In-Circuit Serial Programming, ICSP, ICEPIC, microPort, Migratable Memory, MPASM, MPLIB, MPLINK, MPSIM, MXDEV, PICC, PICDEM, PICDEM.net, rfPIC, Select Mode and Total Endurance are trademarks of Microchip Technology Incorporated in the U.S.A.

Serialized Quick Turn Programming (SQTP) is a service mark of Microchip Technology Incorporated in the U.S.A.

All other trademarks mentioned herein are property of their respective companies.

© 2002, Microchip Technology Incorporated, Printed in the U.S.A., All Rights Reserved.

Printed on recycled paper.

DNV Certification, Inc. USA

ANSI • RAB QMS ACCREDITED

DNV MSC The Netherlands Accredited by the RvA

DNV

ISO 9001 / QS-9000 REGISTERED FIRM

Microchip received QS-9000 quality system certification for its worldwide headquarters, design and wafer fabrication facilities in Chandler and Tempe, Arizona in July 1999 and Mountain View, California in March 2002. The Company's quality system processes and procedures are QS-9000 compliant for its PICmicro® 8-bit MCUs, KEELOQ® code hopping devices, Serial EEPROMs, microperipherals, non-volatile memory and analog products. In addition, Microchip's quality system for the design and manufacture of development systems is ISO 9001 certified.

WORLDWIDE SALES AND SERVICE

AMERICAS

Corporate Office
2355 West Chandler Blvd.
Chandler, AZ 85224-6199
Tel: 480-792-7200 Fax: 480-792-7277
Technical Support: 480-792-7627
Web Address: http://www.microchip.com

Rocky Mountain
2355 West Chandler Blvd.
Chandler, AZ 85224-6199
Tel: 480-792-7966 Fax: 480-792-7456

Atlanta
500 Sugar Mill Road, Suite 200B
Atlanta, GA 30350
Tel: 770-640-0034 Fax: 770-640-0307

Boston
2 Lan Drive, Suite 120
Westford, MA 01886
Tel: 978-692-3848 Fax: 978-692-3821

Chicago
333 Pierce Road, Suite 180
Itasca, IL 60143
Tel: 630-285-0071 Fax: 630-285-0075

Dallas
4570 Westgrove Drive, Suite 160
Addison, TX 75001
Tel: 972-818-7423 Fax: 972-818-2924

Detroit
Tri-Atria Office Building
32255 Northwestern Highway, Suite 190
Farmington Hills, MI 48334
Tel: 248-538-2250 Fax: 248-538-2260

Kokomo
2767 S. Albright Road
Kokomo, Indiana 46902
Tel: 765-864-8360 Fax: 765-864-8387

Los Angeles
18201 Von Karman, Suite 1090
Irvine, CA 92612
Tel: 949-263-1888 Fax: 949-263-1338

New York
150 Motor Parkway, Suite 202
Hauppauge, NY 11788
Tel: 631-273-5305 Fax: 631-273-5335

San Jose
Microchip Technology Inc.
2107 North First Street, Suite 590
San Jose, CA 95131
Tel: 408-436-7950 Fax: 408-436-7955

Toronto
6285 Northam Drive, Suite 108
Mississauga, Ontario L4V 1X5, Canada
Tel: 905-673-0699 Fax: 905-673-6509

ASIA/PACIFIC

Australia
Microchip Technology Australia Pty Ltd
Suite 22, 41 Rawson Street
Epping 2121, NSW
Australia
Tel: 61-2-9868-6733 Fax: 61-2-9868-6755

China - Beijing
Microchip Technology Consulting (Shanghai) Co., Ltd., Beijing Liaison Office
Unit 915
Bei Hai Wan Tai Bldg.
No. 6 Chaoyangmen Beidajie
Beijing, 100027, No. China
Tel: 86-10-85282100 Fax: 86-10-85282104

China - Chengdu
Microchip Technology Consulting (Shanghai) Co., Ltd., Chengdu Liaison Office
Rm. 2401, 24th Floor,
Ming Xing Financial Tower
No. 88 TIDU Street
Chengdu 610016, China
Tel: 86-28-6766200 Fax: 86-28-6766599

China - Fuzhou
Microchip Technology Consulting (Shanghai) Co., Ltd., Fuzhou Liaison Office
Unit 28F, World Trade Plaza
No. 71 Wusi Road
Fuzhou 350001, China
Tel: 86-591-7503506 Fax: 86-591-7503521

China - Shanghai
Microchip Technology Consulting (Shanghai) Co., Ltd.
Room 701, Bldg. B
Far East International Plaza
No. 317 Xian Xia Road
Shanghai, 200051
Tel: 86-21-6275-5700 Fax: 86-21-6275-5060

China - Shenzhen
Microchip Technology Consulting (Shanghai) Co., Ltd., Shenzhen Liaison Office
Rm. 1315, 13/F, Shenzhen Kerry Centre,
Renminnan Lu
Shenzhen 518001, China
Tel: 86-755-2350361 Fax: 86-755-2366086

Hong Kong
Microchip Technology Hongkong Ltd.
Unit 901-6, Tower 2, Metroplaza
223 Hing Fong Road
Kwai Fong, N.T., Hong Kong
Tel: 852-2401-1200 Fax: 852-2401-3431

India
Microchip Technology Inc.
India Liaison Office
Divyasree Chambers
1 Floor, Wing A (A3/A4)
No. 11, O'Shaugnessey Road
Bangalore, 560 025, India
Tel: 91-80-2290061 Fax: 91-80-2290062

Japan
Microchip Technology Japan K.K.
Benex S-1 6F
3-18-20, Shinyokohama
Kohoku-Ku, Yokohama-shi
Kanagawa, 222-0033, Japan
Tel: 81-45-471- 6166 Fax: 81-45-471-6122

Korea
Microchip Technology Korea
168-1, Youngbo Bldg. 3 Floor
Samsung-Dong, Kangnam-Ku
Seoul, Korea 135-882
Tel: 82-2-554-7200 Fax: 82-2-558-5934

Singapore
Microchip Technology Singapore Pte Ltd.
200 Middle Road
#07-02 Prime Centre
Singapore, 188980
Tel: 65-6334-8870 Fax: 65-6334-8850

Taiwan
Microchip Technology Taiwan
11F-3, No. 207
Tung Hua North Road
Taipei, 105, Taiwan
Tel: 886-2-2717-7175 Fax: 886-2-2545-0139

EUROPE

Denmark
Microchip Technology Nordic ApS
Regus Business Centre
Lautrup hoj 1-3
Ballerup DK-2750 Denmark
Tel: 45 4420 9895 Fax: 45 4420 9910

France
Microchip Technology SARL
Parc d'Activite du Moulin de Massy
43 Rue du Saule Trapu
Batiment A - ler Etage
91300 Massy, France
Tel: 33-1-69-53-63-20 Fax: 33-1-69-30-90-79

Germany
Microchip Technology GmbH
Gustav-Heinemann Ring 125
D-81739 Munich, Germany
Tel: 49-89-627-144 0 Fax: 49-89-627-144-44

Italy
Microchip Technology SRL
Centro Direzionale Colleoni
Palazzo Taurus 1 V. Le Colleoni 1
20041 Agrate Brianza
Milan, Italy
Tel: 39-039-65791-1 Fax: 39-039-6899883

United Kingdom
Arizona Microchip Technology Ltd.
505 Eskdale Road
Winnersh Triangle
Wokingham
Berkshire, England RG41 5TU
Tel: 44 118 921 5869 Fax: 44-118 921-5820

03/01/02

© 2002 Microchip Technology Inc.